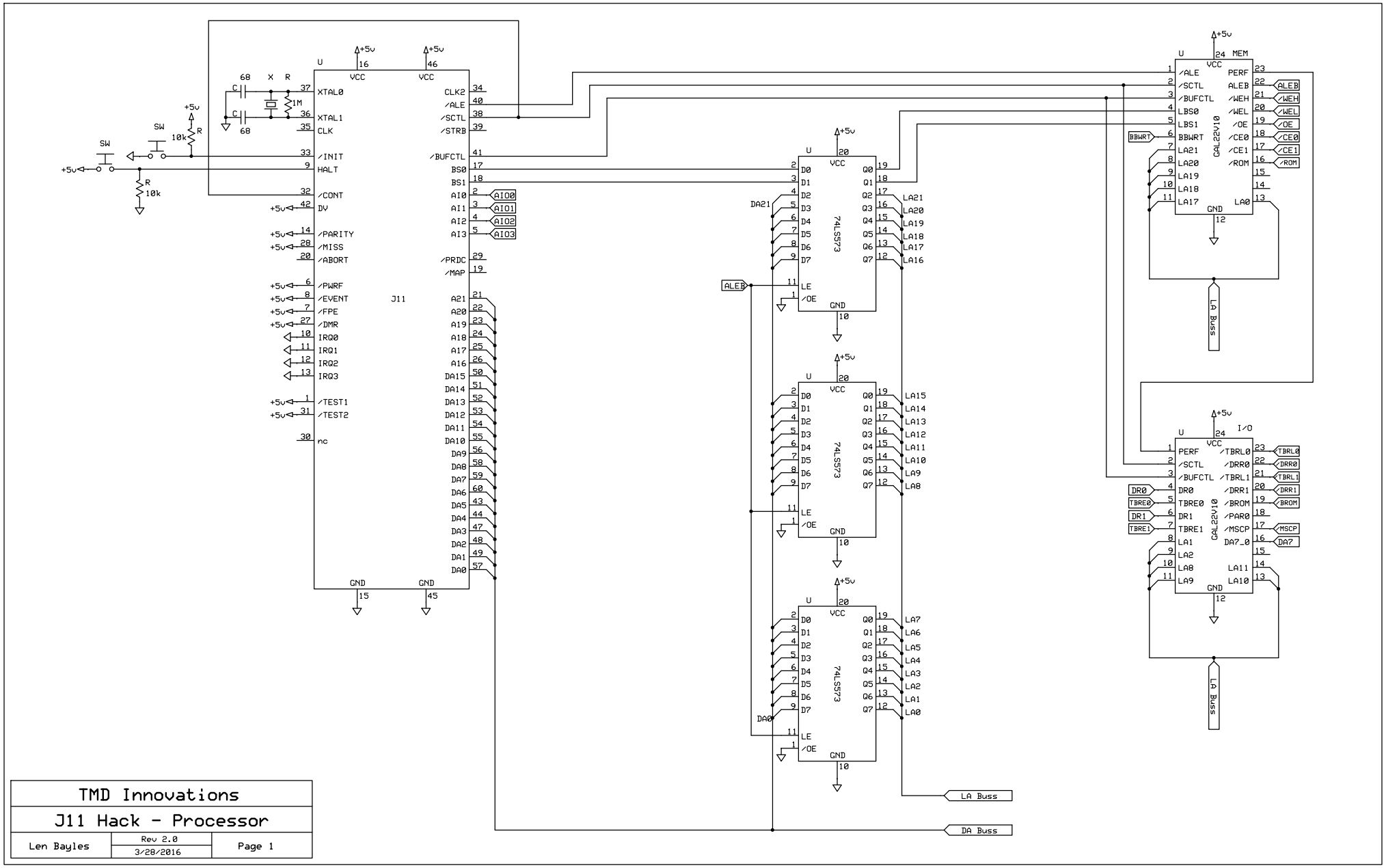
J11
74LS573
GAL22V10
MEM
I/O
LA Buss
DA Buss
TMD Innovations
J11 Hack - Processor
Len Bayles
Rev 2.0
3/28/2016
Page 1